MXIBEEI_2000系列指针式差压表

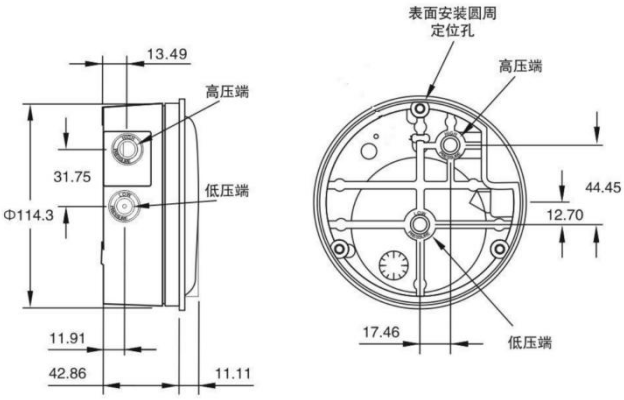

应用和特点

可测量风扇、鼓风机、过滤器阻力、炉体通风、孔板压降等系统的压力。也可用于各类净化间、生物安全柜、洁净工作台、除尘设备、医疗呼吸设备、空气取样器、药机和粮食机械等的压差检测。

多达 69 个型号，含不同量程和工程单位，适合各种应用。利用简洁、无摩擦的磁性运动部件，可以迅速测量出空气或非腐蚀性气体的正压、负压或差压设计抗冲击、防震并且有过载保护。

技术指标

介质：空气和非易燃兼容气体
外壳：铸铝外壳和表圈，PC 面罩
防护等级：IP65
精度：±2%FS (125Pa: ±3%FS, 60Pa: ±4%FS) @20~26° C
压力范围：-70~100KPa
尺寸：表盘直径为 120 mm，嵌入安装开孔直径为 115mm
温度范围：-15~60° C
压力连接：1/8″ NPT 的压力接口，侧面和背面各一对
重量：约 4500g
安装方式：嵌入式或表面安装，垂直方向
标准配件：包括两个 1/8’ NPT 堵头，两个 1/8’ 连接软管的气嘴，和三个安装支架

选型表

型号	量程 英寸水柱
2000–00IN	.05–0–.20
2000–0.25IN	0–.25
2000–0.50IN	0–.50
2000–1IN	0–1.0
2000–2IN	0–2.0
2000–3IN	0–3.0
2000–4IN	0–4.0
2000–5IN	0–5.0
2000–6IN	0–6.0
2000–8IN	0–8.0
2000–10IN	0–10
2000–15IN	0–15
2000–20IN	0–20
2000–25IN	0–25
2000–30IN	0–30
2000–40IN	0–40
2000–50IN	0–50
2000–60IN	0–60
2000–80IN	0–80
2000–100IN	0–100
2000–150IN	0–150
2300–0.5IN	.25–0–.25
2300–1.0IN	.5–0–.5
2300–2.0IN	1–0–1
2300–4.0IN	2–0–2
2300–10IN	5–0–5
2300–20IN	10–0–10
2300–30IN	15–0–15

型号	量程 PSI
2000–1PSI	0–1
2000–2PSI	0–2
2000–3PSI	0–3
2000–4PSI	0–4
2000–5PSI	0–5
2000–10PSI	0–10
2000–15PSI	0–15
2000–20PSI	0–20
2000–30PSI	0–30

型号	量程 英寸汞柱
2000–5Hg	0–5
2000–6Hg	0–6
2000–10Hg	0–10
2000–15Hg	0–15
2000–20Hg	0–20
2000–25Hg	0–25
2000–30Hg	0–30
2000–40Hg	0–40
2000–50Hg	0–50
2000–60Hg	0–60

型号	量程 mm汞柱
2000–4mmHg	0–4
2000–10mmHg	0–10

双刻度风速单位

型号	量程 英寸水柱 F.P.M
2000D–0.25AV	0–.25/300–2000
2000D–0.50AV	0–.50/500–2800
2000D–1.0AV	0–1.0/500–4000
2000D–2.0AV	0–2.0/1000–5600
2000D–10AV	0–10/2000–12500

型号	量程 mm 水柱
2000–6mm	0–6
2000–8mm	0–8
2000–10mm	0–10
2000–15mm	0–15
2000–20mm	0–20
2000–25mm	0–25
2000–30mm	0–30
2000–40mm	0–40
2000–50mm	0–50
2000–60mm	0–60
2000–80mm	0–80
2000–100mm	0–100
2000–150mm	0–150
2000–200mm	0–200
2000–250mm	0–250
2000–300mm	0–300
2000–500mm	0–500
2000–1000mm	0–1000
2300–20mm	10–0–10
2300–30mm	15–0–15

型号	量程 cm水柱
2000–1cm	0–1
2000–2cm	0–2
2000–3cm	0–3
2000–4cm	0–4
2000–5cm	0–5
2000–6cm	0–6
2000–8cm	0–8
2000–10cm	0–10
2000–15cm	0–15
2000–20cm	0–20
2000–25cm	0–25
2000–30cm	0–30
2000–40cm	0–40
2000–50cm	0–50
2000–60cm	0–60
2000–80cm	0–80
2000–100cm	0–100
2000–150cm	0–150
2000–200cm	0–200
2000–250cm	0–250
2000–300cm	0–300
2300–2cm	1–0–1
2300–4cm	2–0–2
2300–10cm	5–0–5
2300–20cm	10–0–10
2300–30cm	15–0–15

型号	量程 Pa
2000–60Pa	0–60
2000–125Pa	0–125
2000–250Pa	0–250
2000–300Pa	0–300
2000–500Pa	0–500
2000–750Pa	0–750
2300–120Pa	60–0–60
2300–250Pa	125–0–125
2300–500Pa	250–0–250

型号	量程 KPa
2000–1kPa	0–1
2000–1.5kPa	0–1.5
2000–2kPa	0–2
2000–3kPa	0–3
2000–4kPa	0–4
2000–5kPa	0–5
2000–8kPa	0–8
2000–10kPa	0–10
2000–15kPa	0–15
2000–20kPa	0–20
2000–25kPa	0–25
2000–30kPa	0–30
2300–1kPa	.5–0–.5
2300–3kPa	1.5–0–1.5